UNIVERSITY OF CAMBRIDGE INTERNATIONAL EXAMINATIONS
General Certificate of Education Advanced Level

CANDIDATE NAME

CENTRE NUMBER

CANDIDATE NUMBER

8470198490

PHYSICS **9702/43**

Paper 4 A2 Structured Questions **May/June 2010**

1 hour 45 minutes

Candidates answer on the Question Paper.

No Additional Materials are required.

READ THESE INSTRUCTIONS FIRST

Write your Centre number, candidate number and name on all the work you hand in.
Write in dark blue or black pen.
You may use a soft pencil for any diagrams, graphs or rough working.
Do not use staples, paper clips, highlighters, glue or correction fluid.
DO **NOT** WRITE IN ANY BARCODES.

Answer **all** questions.
You may lose marks if you do not show your working or if you do not use appropriate units.

At the end of the examination, fasten all your work securely together.
The number of marks is given in brackets [ ] at the end of each question or part question.

For Examiner's Use	
1	
2	
3	
4	
5	
6	
7	
8	
9	
10	
11	
12	
Total	

This document consists of **20** printed pages.

DC (SM/DJ) 28740
© UCLES 2010

Data

speed of light in free space,	$c = 3.00 \times 10^{8}\ \text{m s}^{-1}$
permeability of free space,	$\mu_0 = 4\pi \times 10^{-7}\ \text{H m}^{-1}$
permittivity of free space,	$\varepsilon_0 = 8.85 \times 10^{-12}\ \text{F m}^{-1}$
elementary charge,	$e = 1.60 \times 10^{-19}\ \text{C}$
the Planck constant,	$h = 6.63 \times 10^{-34}\ \text{J s}$
unified atomic mass constant,	$u = 1.66 \times 10^{-27}\ \text{kg}$
rest mass of electron,	$m_\text{e} = 9.11 \times 10^{-31}\ \text{kg}$
rest mass of proton,	$m_\text{p} = 1.67 \times 10^{-27}\ \text{kg}$
molar gas constant,	$R = 8.31\ \text{J K}^{-1}\ \text{mol}^{-1}$
the Avogadro constant,	$N_\text{A} = 6.02 \times 10^{23}\ \text{mol}^{-1}$
the Boltzmann constant,	$k = 1.38 \times 10^{-23}\ \text{J K}^{-1}$
gravitational constant,	$G = 6.67 \times 10^{-11}\ \text{N m}^2\ \text{kg}^{-2}$
acceleration of free fall,	$g = 9.81\ \text{m s}^{-2}$

© UCLES 2010

Formulae

uniformly accelerated motion, $s = ut + \frac{1}{2}at^2$
$v^2 = u^2 + 2as$

work done on/by a gas, $W = p\Delta V$

gravitational potential, $\phi = -\frac{Gm}{r}$

hydrostatic pressure, $p = \rho gh$

pressure of an ideal gas, $p = \frac{1}{3}\frac{Nm}{V}\langle c^2 \rangle$

simple harmonic motion, $a = -\omega^2 x$

velocity of particle in s.h.m., $v = v_0 \cos \omega t$
$v = \pm \omega\sqrt{(x_0^2 - x^2)}$

electric potential, $V = \frac{Q}{4\pi\varepsilon_0 r}$

capacitors in series, $1/C = 1/C_1 + 1/C_2 + \ldots$

capacitors in parallel, $C = C_1 + C_2 + \ldots$

energy of charged capacitor, $W = \frac{1}{2}QV$

resistors in series, $R = R_1 + R_2 + \ldots$

resistors in parallel, $1/R = 1/R_1 + 1/R_2 + \ldots$

alternating current/voltage, $x = x_0 \sin \omega t$

radioactive decay, $x = x_0 \exp(-\lambda t)$

decay constant, $\lambda = \frac{0.693}{t_{\frac{1}{2}}}$

© UCLES 2010

[Turn over

Section A

Answer **all** the questions in the spaces provided.

For Examiner's Use

1 **(a)** Define *gravitational potential* at a point.

.....

.....

..... [2]

(b) The Earth may be considered to be an isolated sphere of radius R with its mass concentrated at its centre.
The variation of the gravitational potential ϕ with distance x from the centre of the Earth is shown in Fig. 1.1.

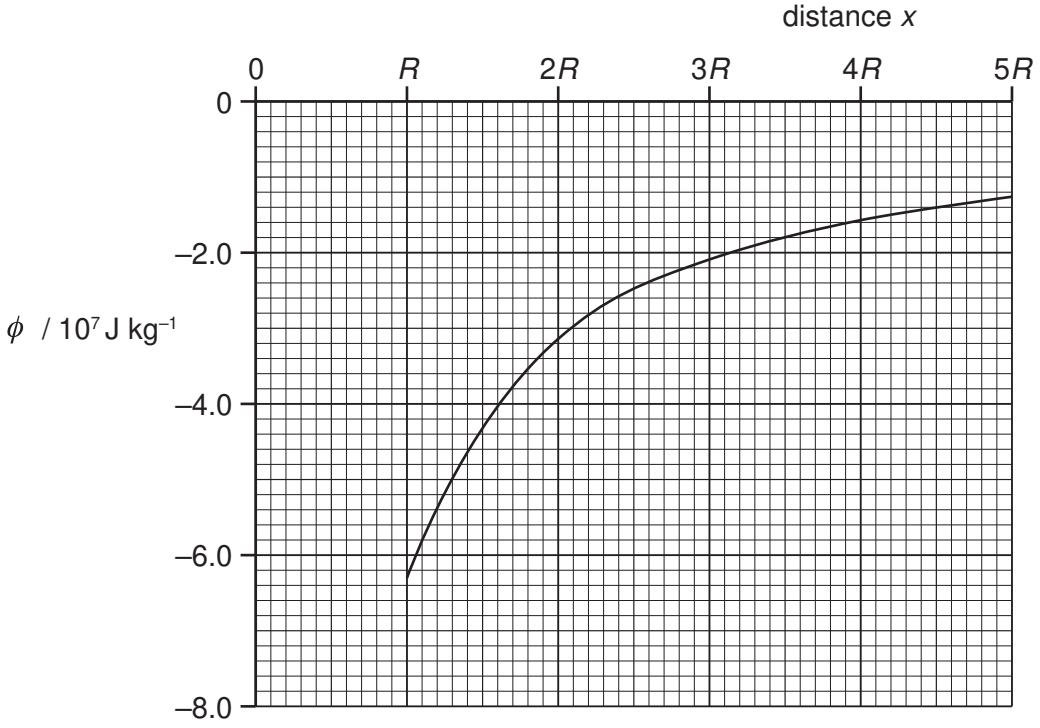

Fig. 1.1

The radius R of the Earth is 6.4×10^6 m.

(i) By considering the gravitational potential at the Earth's surface, determine a value for the mass of the Earth.

mass = ... kg [3]

© UCLES 2010

For Examiner's Use

(ii) A meteorite is at rest at infinity. The meteorite travels from infinity towards the Earth.

Calculate the speed of the meteorite when it is at a distance of $2R$ above the Earth's surface. Explain your working.

speed = ... $m\,s^{-1}$ [4]

(iii) In practice, the Earth is not an isolated sphere because it is orbited by the Moon, as illustrated in Fig. 1.2.



Fig. 1.2 (not to scale)

The initial path of the meteorite is also shown.

Suggest two changes to the motion of the meteorite caused by the Moon.

1. .....

.....

2. .....

.....

[2]

For Examiner's Use

2 A long strip of springy steel is clamped at one end so that the strip is vertical. A mass of 65 g is attached to the free end of the strip, as shown in Fig. 2.1.

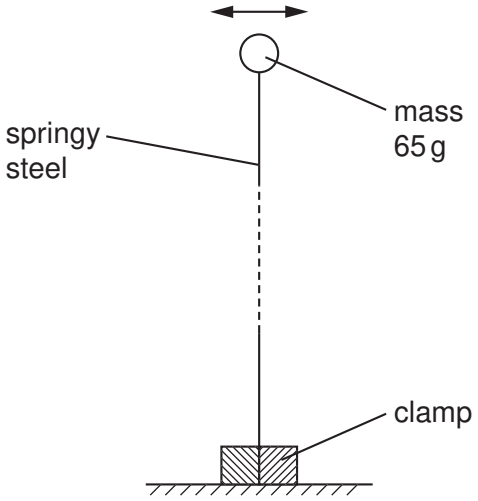

Fig. 2.1

The mass is pulled to one side and then released. The variation with time t of the horizontal displacement of the mass is shown in Fig. 2.2.

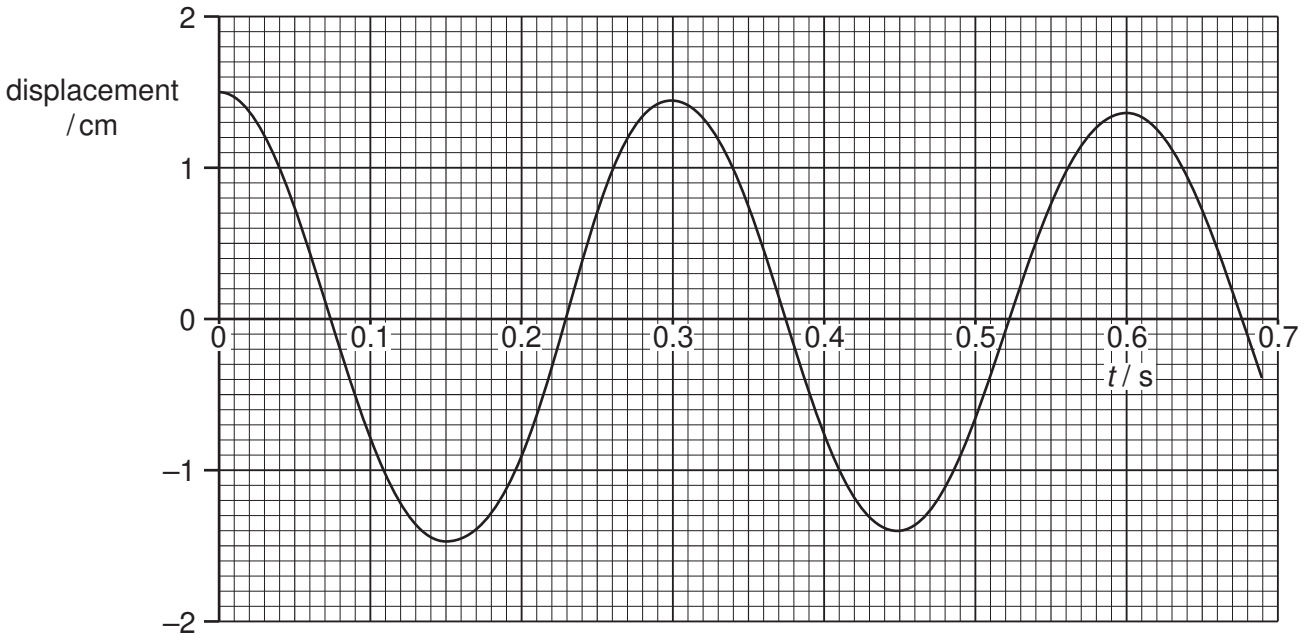

Fig. 2.2

The mass undergoes damped simple harmonic motion.

(a) (i) Explain what is meant by *damping*.

.....

.....

..... [2]

(ii) Suggest, with a reason, whether the damping is light, critical or heavy.

For Examiner's Use

.....

.....

..... [2]

(b) (i) Use Fig. 2.2 to determine the frequency of vibration of the mass.

frequency = ... Hz [1]

(ii) Hence show that the initial energy stored in the steel strip before the mass is released is approximately 3.2 mJ.

[2]

(c) After eight complete oscillations of the mass, the amplitude of vibration is reduced from 1.5 cm to 1.1 cm. State and explain whether, after a further eight complete oscillations, the amplitude will be 0.7 cm.

.....

.....

..... [2]

© UCLES 2010

[Turn over

For Examiner's Use

3 **(a)** The resistance of a thermistor at 0 °C is 3840 Ω. At 100 °C the resistance is 190 Ω. When the thermistor is placed in water at a particular constant temperature, its resistance is 2300 Ω.

(i) Assuming that the resistance of the thermistor varies linearly with temperature, calculate the temperature of the water.

temperature = ... °C [2]

(ii) The temperature of the water, as measured on the thermodynamic scale of temperature, is 286 K.

By reference to what is meant by the thermodynamic scale of temperature, comment on your answer in **(i)**.

.....

.....

.....

..... [3]

(b) A polystyrene cup contains a mass of 95 g of water at 28 °C.

A cube of ice of mass 12 g is put into the water. Initially, the ice is at 0 °C. The water, of specific heat capacity 4.2×10^3 J kg^{-1} K^{-1}, is stirred until all the ice melts.

Assuming that the cup has negligible mass and that there is no heat exchange with the atmosphere, calculate the final temperature of the water.

The specific latent heat of fusion of ice is 3.3×10^5 J kg^{-1}.

temperature = ... °C [4]

© UCLES 2010

4 Two point charges A and B each have a charge of $+6.4 \times 10^{-19}$ C. They are separated in a vacuum by a distance of 12.0 μm, as shown in Fig. 4.1.

For Examiner's Use

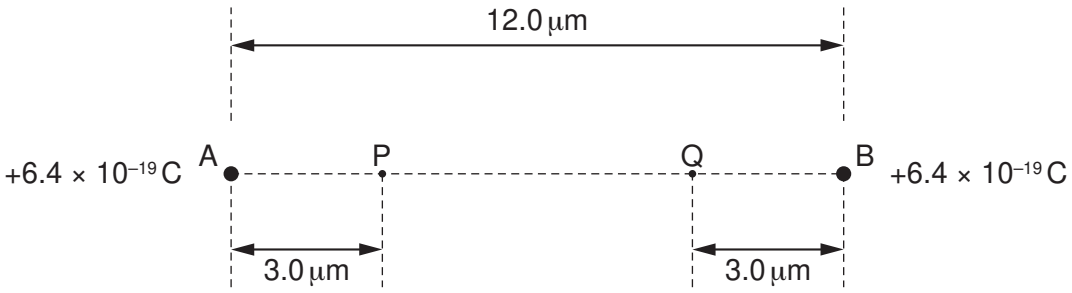

Fig. 4.1

Points P and Q are situated on the line AB. Point P is 3.0 μm from charge A and point Q is 3.0 μm from charge B.

(a) Calculate the force of repulsion between the charges A and B.

force = ... N [3]

(b) Explain why, without any calculation, when a small test charge is moved from point P to point Q, the net work done is zero.

.....

.....

..... [2]

(c) Calculate the work done by an electron in moving from the midpoint of line AB to point P.

work done = ... J [4]

5 **(a)** State two functions of capacitors in electrical circuits.

For Examiner's Use

1. .....

2. .....

[2]

(b) Three capacitors, each marked '30 μF, 6 V max', are arranged as shown in Fig. 5.1.

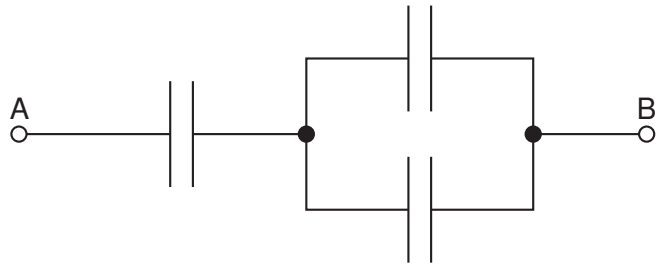

Fig. 5.1

Determine, for the arrangement shown in Fig. 5.1,

(i) the total capacitance,

capacitance = ... μF [2]

(ii) the maximum potential difference that can safely be applied between points A and B.

potential difference = ... V [2]

© UCLES 2010

(c) A capacitor of capacitance 4700 μF is charged to a potential difference of 18 V. It is then partially discharged through a resistor. The potential difference is reduced to 12 V. Calculate the energy dissipated in the resistor during the discharge.

For Examiner's Use

energy = ... J [3]

For Examiner's Use

6 **(a)** A uniform magnetic field has constant flux density B. A straight wire of fixed length carries a current I at an angle θ to the magnetic field, as shown in Fig. 6.1.

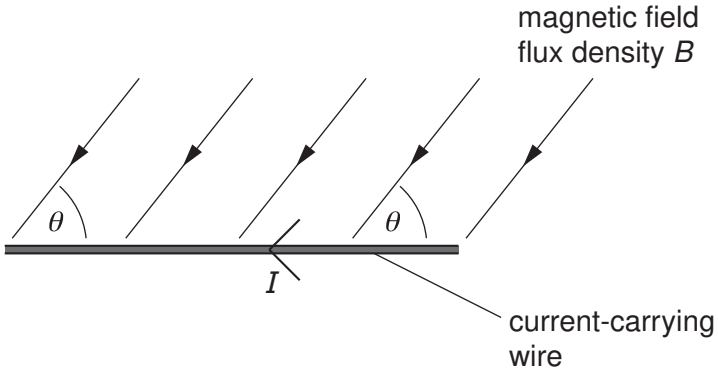

Fig. 6.1

(i) The current I in the wire is changed, keeping the angle θ constant.
On Fig. 6.2, sketch a graph to show the variation with current I of the force F on the wire.

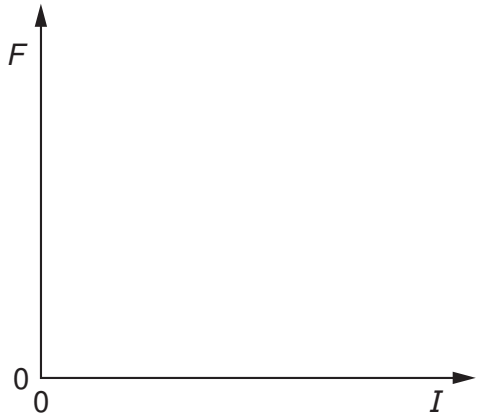

Fig. 6.2

[2]

(ii) The angle θ between the wire and the magnetic field is now varied. The current I is kept constant.
On Fig. 6.3, sketch a graph to show the variation with angle θ of the force F on the wire.

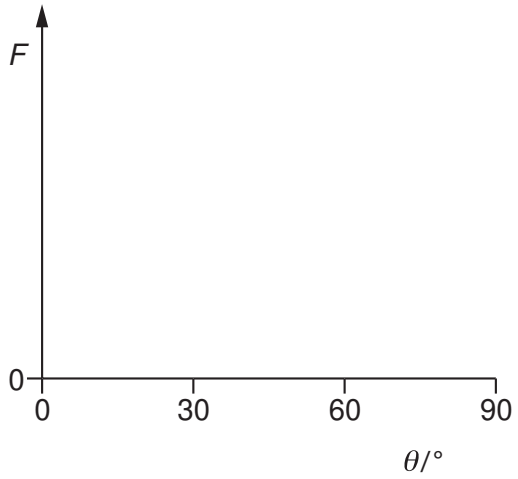

Fig. 6.3 [3]

(b) A uniform magnetic field is directed at right-angles to the rectangular surface PQRS of a slice of a conducting material, as shown in Fig. 6.4.

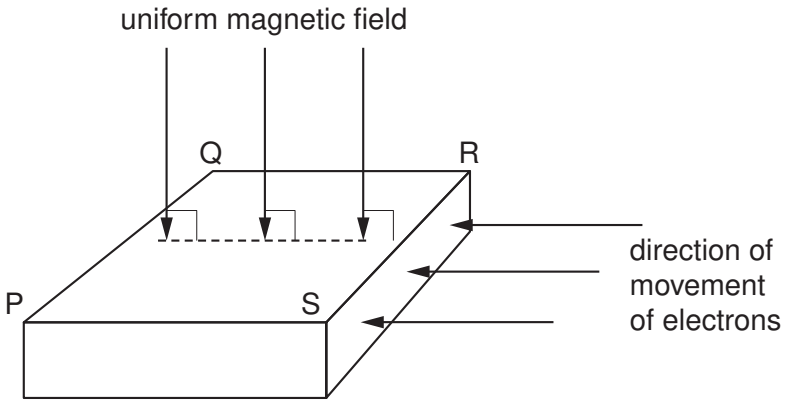

Fig. 6.4

Electrons, moving towards the side SR, enter the slice of conducting material. The electrons enter the slice at right-angles to side SR.

(i) Explain why, initially, the electrons do not travel in straight lines across the slice from side SR to side PQ.

.....

.....

..... [2]

(ii) Explain to which side, PS or QR, the electrons tend to move.

.....

.....

..... [2]

For Examiner's Use

7 **(a)** Explain what is meant by the *root-mean-square* (r.m.s.) value of an alternating voltage.

.....

.....

..... [2]

(b) An alternating voltage V is represented by the equation

$$V = 220 \sin(120\pi t),$$

where V is measured in volts and t is in seconds.

For this alternating voltage, determine

(i) the peak voltage,

peak voltage = ... V [1]

(ii) the r.m.s. voltage,

r.m.s. voltage = ... V [1]

(iii) the frequency.

frequency = ... Hz [1]

(c) The alternating voltage in **(b)** is applied across a resistor such that the mean power output from the resistor is 1.5 kW.

Calculate the resistance of the resistor.

resistance = ... Ω [2]

© UCLES 2010

8 Americium-241 is an artificially produced radioactive element that emits α-particles. A sample of americium-241 of mass 5.1 μg is found to have an activity of 5.9×10^5 Bq.

For Examiner's Use

(a) Determine, for this sample of americium-241,

(i) the number of nuclei,

number = ... [2]

(ii) the decay constant,

decay constant = ... s^{-1} [2]

(iii) the half-life, in years.

half-life = ... years [2]

(b) Another radioactive element has a half-life of approximately 4 hours.
Suggest why measurement of the mass and activity of a sample of this element is not appropriate for the determination of its half-life.

.....

..... [1]

© UCLES 2010

[Turn over

Section B

For Examiner's Use

Answer **all** the questions in the spaces provided.

9 **(a)** Negative feedback may be used in amplifier circuits. State

(i) what is meant by *negative feedback*,

.....

.....

..... [2]

(ii) two effects of negative feedback on an amplifier incorporating an operational amplifier (op-amp).

1. .....

.....

2. .....

.....

[2]

(b) Fig. 9.1 is a circuit for an amplifier that is used with a microphone.

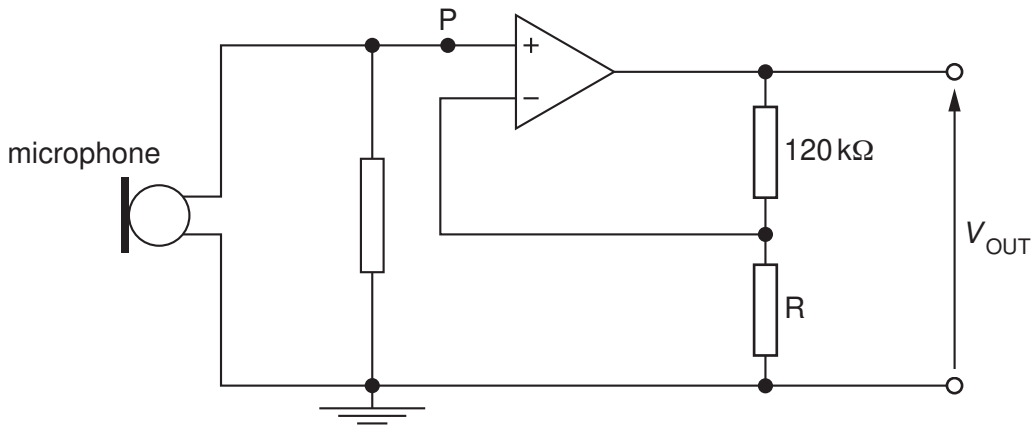

Fig. 9.1

The output potential difference V_{OUT} is 4.4 V when the potential at point P is 62 mV.

Determine

(i) the gain of the amplifier,

gain = ... [1]

(ii) the resistance of the resistor R.

For Examiner's Use

resistance = ... Ω [2]

(c) The maximum potential produced by the microphone at point P on Fig. 9.1 is 95 mV. The power supply for the operational amplifier may be either +/– 5 V or +/– 9 V.

State which power supply should be used. Justify your answer quantitatively.

.....

.....

.....

..... [3]

10 **(a)** State the name of an electrical sensing device that will respond to changes in

For Examiner's Use

(i) length,

..... [1]

(ii) pressure.

..... [1]

(b) A relay is sometimes used as the output of a sensing circuit.

The output of a particular sensing circuit is either +2V or −2V.

On Fig. 10.1, draw symbols for a relay and any other necessary component so that the external circuit is switched on only when the output from the sensing circuit is +2V.

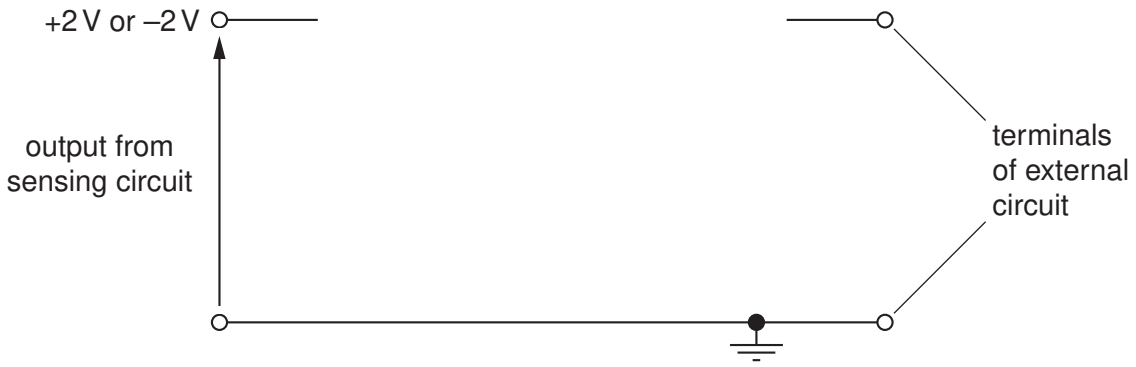

Fig. 10.1

[4]

11 Explain the main principles behind the **generation** of ultrasound to obtain diagnostic information about internal body structures.

For Examiner's Use

.....

.....

.....

.....

.....

.....

.....

.....

.....

.....

.....

.....

..... [6]

12 A telephone link between two towns is to be provided using an optic fibre. The length of the optic fibre between the two towns is 75 km.

For Examiner's Use

(a) State two changes that occur in a signal as it is transmitted along an optic fibre.

1. .....

.....

2. .....

.....

[2]

(b) The optic fibre has an attenuation per unit length of 1.6 dB km^{-1}. The minimum permissible signal-to-noise power ratio in the fibre is 25 dB. The average noise power in the optic fibre is 6.1×10^{-19} W.

(i) Suggest one reason why power ratios are expressed in dB.

.....

..... [1]

(ii) The signal input power to the optic fibre is designed to be 6.5 mW.
Determine whether repeater amplifiers are necessary in the optic fibre between the two towns.

[5]

Permission to reproduce items where third-party owned material protected by copyright is included has been sought and cleared where possible. Every reasonable effort has been made by the publisher (UCLES) to trace copyright holders, but if any items requiring clearance have unwittingly been included, the publisher will be pleased to make amends at the earliest possible opportunity.

University of Cambridge International Examinations is part of the Cambridge Assessment Group. Cambridge Assessment is the brand name of University of Cambridge Local Examinations Syndicate (UCLES), which is itself a department of the University of Cambridge.

© UCLES 2010